NJP354 Series

Features

■ Lead Free ■ HF ■ RoHS

- 3.5 ϕ
- CTIA / OMTP Compliance

NEW

Rating	DC12V 1A max.
Contact Resistance	100mΩ max.
Insulation Resistance	DC500V -100MΩ min.
Withstand Voltage	AC500V - 1 minute
Insertion Force	0.4 ~ 2.0 Kgf
Extraction Force	0.3 ~ 1.5 Kgf

Recommended Reflow Soldering Profile

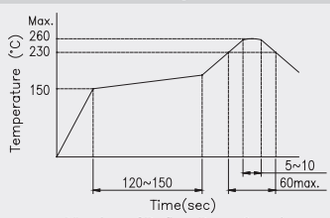

Number of Reflow Pass : 2 cycles

Recommended Manual Soldering Profile

	Temperature	Time
Manual Soldering Temperature	350 ℃ (max.)	3 Sec.(max.)

The solder iron and solder shall be applied at a distance of 1.91 mm to 2.54 mm from the plastic housing.

Durability	5,000 cycles

■ SMT - D Type 12.5L x 6.8W x 4.1H

Product No.	Package
NJP354-103T	1,200 Pcs/Reel

■ Applicable Plug

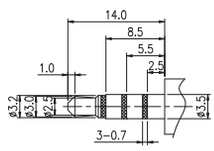

■ Outline Drawing

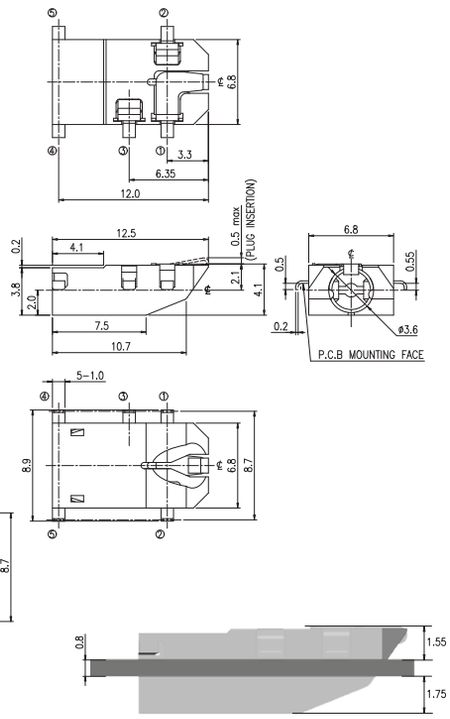

Schematic

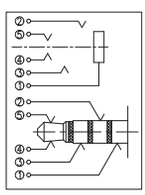

P.C.B Layout

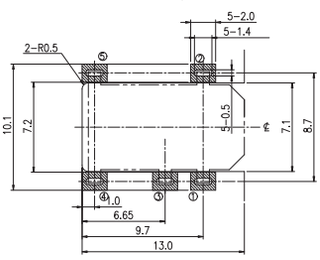

General Tolerance : ±0.2mm.